Bobcat®

S770 - T770 - A770 | New Generation Loaders

Power meets comfort

With the new Bobcat 770 loader range there is a difference you can see – and a difference you'll experience on the job. They have been completely re-designed and offer superior power and hydraulic performance, allowing you to do more, faster and better.

Made for versatility, the S770 with its wide range of attachments is the perfect machine for construction, landscaping, demolition, forestry, agriculture and road applications.

More productivity in 3 compact packages:

Increased tractive effort: you can push more and dig harder than ever before, resulting in faster cycle times.

Improved hydraulic efficiency: by increasing the hydraulic pressure and the standard hydraulic flow, the 770 series manages to get the best performance out of its wide attachment range.

Upgraded cooling system: thanks to a larger fan with a more efficient design, the cooling system allows the loaders to perform at their best for a long period.

Increased engine power: turbo-charged Kubota engine, delivering 92 hp (68.6 kW) to boost your productivity.

Optimised fuel capacity: new additional fuel tank allowing a total capacity of 126 l enables 25% more run time between refuelling stops.

Stay on the right track

Whenever you need to work in the most demanding conditions or extend your working season, the T770 will be your best partner. With more pushing power, more tipping load and lower ground pressure than a skid-steer loader, our compact tracked loader will be faster in various landscaping, grading, forestry and earthmoving jobs.

Thanks to a maintenance-free chaincase and forged steel rollers and idlers, uptime is maximised.

Options for more comfort or performance: Roller Suspension™ and 2 speed travel are just a few of the many options available.

World famous rugged durability:

Thanks to heavy-duty construction, component protection and a superior design, the Bobcat loader outperforms others, maximises uptime, offers more comfort and is still the easiest and fastest to service.

- Lower rear frame extends out beyond tailgate, protecting the rear of the loader
- Quick couplers integrated into the boom
- Hydraulic hoses at the rear re-routed to stay inside the frame for better protection

The durable, all-steel Roller Suspension™ option provides a more comfortable ride and stands up to extreme conditions and materials – maximising uptime and reducing costly repairs.

ROLLER SUSPENSION™

All-wheel steering for a smoother ride

The new A770 is the only compact loader in the industry that can switch from turf-saving all-wheel steer to ultra-manoeuvrable skid-steer at the touch of a button.
On turf or other easily damaged surfaces, the all-wheel steer A770 will be your ideal partner.

The A770 has more lifting power, higher reach and improved hydraulic flow for greater performance and productivity:

- 3.35 m of vertical lift to load high-sided trucks
- 87.1 l/min standard hydraulic flow and 151 l/min high flow
- 341 bar hydraulic relief pressure, giving you the power you need for the most demanding tasks

Easy access to routine maintenance points

For an easy daily maintenance, the swing-open tailgate and the transverse mounted engine allow servicing from one side. Cab tilt provides easy access to the hydraulics. Unmatched access to routine and long term maintenance points.

- Improved oil cooling and radiator cleaning
- Easy access to service items
- Better hydraulic oil filtration (90 to 10 micron).
- Improved hose routings: straight fittings
- See-through hydraulic oil level gauge
- High performance air pre-cleaner
- Auto-tensioning drive belt and accessory belt

First class comfort

Pressurised cab for more operator comfort

Bobcat has the best cabs on the market with the largest cab space in the industry, reduced noise and vibration levels and best in class visibility.

- The cab area has been increased by 10%
- 45 % larger door glass for easier entry and exit and better visibility
- New fully adjustable suspension seat
- Joysticks (option) integrated in the seat arms

Bobcat new generation loaders have a best-in-class pressurised cab, featuring a new one-piece seal that goes all the way around the door and fits into a special curved pocket, keeping dirt and dust out of the operating environment. Sound levels have been decreased, providing improved comfort for the operator.

MP3 compatible radio-ready stereo (option) and 12 V power outlet, Selectable Joystick Control (option)

Full-colour Deluxe instrument panel (option)

Comfortable seat with fully adjustable suspension

Heating and air conditioning (option)

	S770	T770	A770
Machine Rating			
Rated operating capacity (ISO 14397-1)	1569 kg	1611 kg	1550 kg
Tipping load (ISO 14397-1)	3137 kg	4602 kg	3100 kg
Pump capacity	87.1 l/min	87.1 l/min	87.1 l/min
Pump capacity (with high flow option)	151 l/min	151 l/min	151 l/min
System relief at quick couplers	238–245 bar	238–245 bar	238–245 bar
Max. travel speed (low range)	11.4 km/h	10.6 km/h	11.4 km/h
Max. travel speed (high range)	19.8 km/h	17.2 km/h	19.8 km/h
Engine			
Make / Model		Kubota / V3800-DI-T-E3	
Fuel / Cooling		Diesel / Liquid	
Maximum power at 2400 RPM		68.6 kW (92 HP)	
Torque at 1600 RPM (SAE J1995)		315 Nm	
Number of cylinders		4	
Displacement		3769 cm^3	
Weights			
Operating weight	4162 kg	4683 kg	4291 kg
Controls			
Vehicle steering	Direction and speed controlled by two hand levers or joysticks (optional)		
Loader hydraulics tilt and lift	Separate foot pedals or optional Advanced Control System (ACS) or optional Advanced Hand Controls (AHC) or Selectable Joystick Control (SJC)		
Front auxiliary (standard)	Electrical switch on right-hand joystick		
Drive System			
Transmission	Infinitely variable tandem hydrostatic piston pumps, driving two fully reversing hydrostatic motors		
Fluid Capacities			
Cooling system capacity with heater	14.4 l	18.5 l	18.5 l
Cooling system capacity w/o heater	-	15.1 l	15.1 l
Engine oil with filter capacity	11.4 l	11.4 l	11.4 l
Fuel tank capacity	124.2 l	134.8 l	109 l
Hydraulic reservoir capacity	11.4 l	11.4 l	11.4 l
Hydraulic / hydrostatic system capacity	36 l	36 l	36 l
Environmental			
Operator LpA (EU Directive 2006/42/EC) / (uncertainty)	83.1 dB(A) - 2.5 dB(A)	84.8 dB(A) - 2.5 dB(A)	84.8 dB(A) - 2.5 dB(A)
Noise level LWA (EU Directive 2000/14/EC)	102 dB(A)	104 dB(A)	102 dB(A)
Whole body vibration (ISO 2631–1) / (uncertainty)	1.12 m/s^2 - 0.448 m/s^2	0.91 m/s^2 - 0.455 m/s^2	0.86 m/s^2 - 0.43 m/s^2
Hand-arm vibration (ISO 5349–1)	1.57 m/s^2	1.83 m/s^2	0.92 m/s^2

Standard Features

S770 / A770	T770
Two-speed travel	450 mm rubber tracks – C-pattern
12 x 16.5, 12–ply, Bobcat Heavy duty tyres	

Options

S770 / T770 / A770

Deluxe instrument panel	Roller Suspension™ (T770 only)
Cab enclosure with heating	Two-speed travel (T770 only)
Cab enclosure with heating and air conditioning	
High-flow hydraulics	
Power Bob-Tach™	
Advanced Control System (ACS)	
Advanced Hand Controls (AHC)	
Selectable Joystick Controls (SJC)	
12 x 16.5, 12–ply, Bobcat Heavy duty tyres (offset rims only on S770)	
33 x 15.5–16.5, 12–ply, Bobcat Superflotation tyres (offset rims only on S770)	
12 x 16.5, 12–ply, Bobcat Severe duty tyres	
12 x 16.5, 12–ply, Bobcat Severe duty tyres, poly filled	
12 x 16.5, 12–ply, Bobcat Solid flex tyres	
33 x 15.5-16.5, 12–ply, Bobcat Turf and Sand tyres (A770 only)	

Attachments

Angle Broom	Pallet Forks, Hydraulic
Auger	Pallet Forks, Heavy-duty
Bale Fork	Planer
Blade, Snow	Scarifier
Box Blade	Scraper
Brushcat Rotary Cutter	Snowblower / Snow V-blade
Brush Saw	Sod Layer
Buckets	Soil Conditioner
Combination Bucket	Salt & Sand Spreader
Concrete Pump	Stabilizers, Rear
Digger	Stump Grinder
Dozer Blade	Sweeper
Dumping Hopper	Tiller
Flail Cutter	Tree Transplanter
Forestry Cutter	Trench compactor
Forks, Utility	Trencher
Grader	Utility Forks / Frame
Grapples, Industrial / Utility	Vibratory Roller
Hydraulic Breaker	Water Kit
Landplane	Wheel Saw
Landscape Rake	Wood Chipper
Mower	Whisker Push Broom

Dimensions

All dimensions in mm.

S770

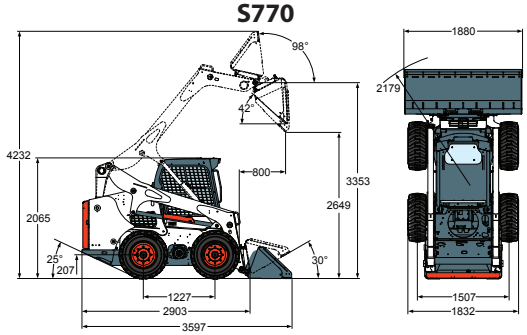

T770

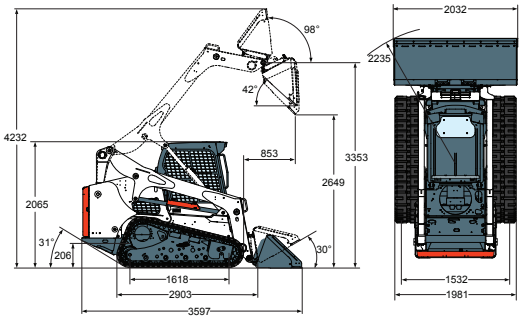

A770

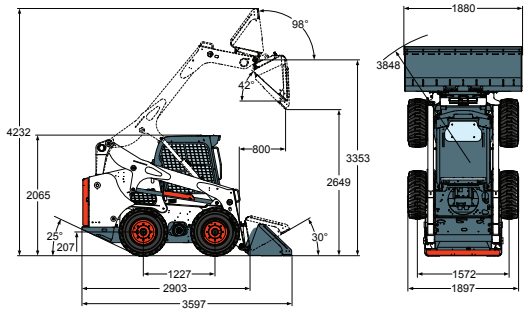

Specifications and design are subject to change without notice. Pictures of Bobcat products may show other than standard equipment.

www.bobcat.eu

FSC Mixed Sources

Bobcat®

©2012 BOBCAT B 4473370-EN (11-12)

DI CE - Drève Richelle 167 - B-1410 Waterloo, Belgium